PG SERIES

產品特點 Product Features

齒輪箱和內環齒輪採一體式設計，結構緊湊、精密度高、輸出扭矩大。
Gear box and internal ring gear are integrated designed, diameter maximized, high precision and high torque capacity are specialties.

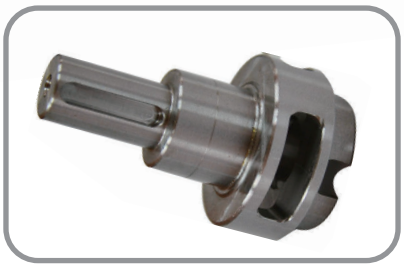

行星臂架與輸出軸採一體式的設計結構，確保最大耐扭力剛性及穩定性
Integrated design of planet carrier and output shaft ensures the maximum torque stiffness and stability.

輸入端與馬達的連結機構，採用筒夾式的鎖緊經動平衡分析，以確保在高輸入轉速下結合介面的同心度和零背隙的動力傳遞。
Triple split collet with dynamic balanced set collar clampingsystem provides backlash free power transmission and eliminatesslippage. 100% concentricity allows for smooth rotation andhigher input speed capability.

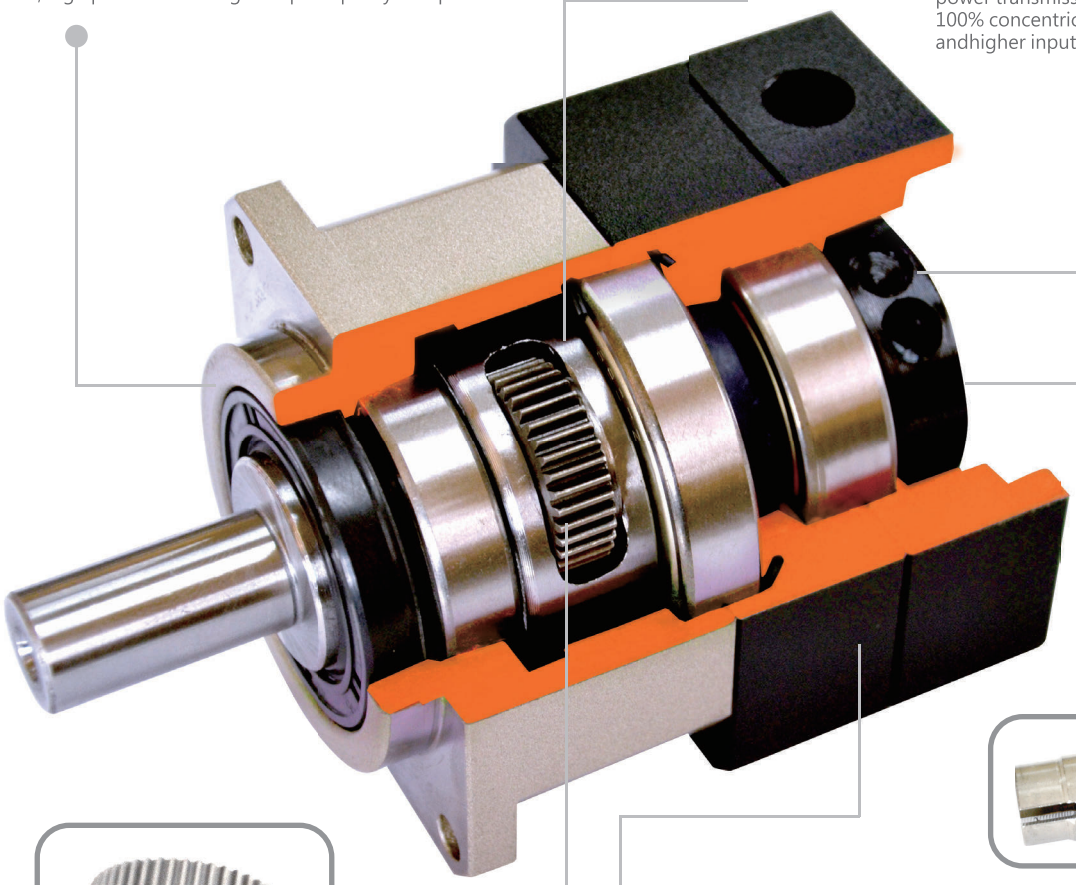

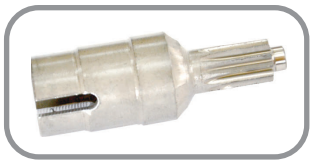

太陽齒採一體式設計，應用於高負載使其精確傳動不滑脫。
The sun gear adopted one-piece design, integrate with all components perfectly. It' s for heavy duty and high speed load application. Acts with accurate transmission without slippage and escape.

齒輪材質選用鉻鉬釩合金鋼，經調質熱處理至基材硬度HRC25 度，在利用氣體氮化方式將齒輪表面硬度提昇至600HV，以獲得最佳的耐磨耗及耐衝擊韌性。
To gain the best abrasion performance and impact resistance，Chromium Molybdenum Vanadium Alloy steel is selected as raw material.Accompany with quenching and tempering heat treatment process，the core hardness is increased to 25 HRC . Accompany with plasma nitriding heat treatment process，the surface hardness is increased to 600 HV.

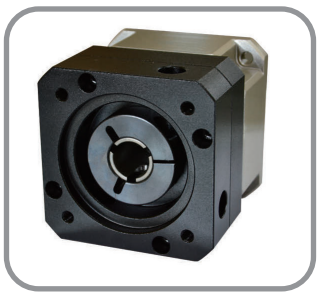

馬達連接板和襯套採模組化設計，適用於任何廠牌、型式的伺服馬達。
Motor adapter and bushing module are modularized designed，which applied to types of servomotors.

減速機性能資料
Reducer Performance Information

規　格 Model NO.	單 位 Unit	節 數 Stage	減速比 Ratio	42	60	90	115	142	180	220
額定輸出力矩 T_{2N} Rated Output Torque	Nm	L1	3	18	52	130	276	492	955	1440
			4	16	47	116	246	436	875	1320
			5	15	44	109	231	411	850	1290
			7	14	41	103	216	383	805	1200
			10	13	39	97	206	366	775	1160
		L2	15	18	52	130	276	492	955	1440
			20	16	47	116	246	436	875	1320
			25	15	44	109	231	411	850	1290
			30	18	52	130	276	492	955	1440
			35	14	41	103	216	383	805	1200
			40	16	47	116	246	436	875	1320
			50	15	44	109	231	411	850	1290
			70	14	41	103	216	383	805	1200
			100	13	39	97	206	366	775	1160
最大輸入轉速 n_{1B} Max. Input Speed	rpm	L1/L2	3~100	5,000	5,000	5,000	5,000	5,000	3,000	3,000
額定輸入轉速 n_{1N} Rated Input Speed	rpm	L1/L2	3~100	3,000	3,000	3,000	3,000	3,000	2,000	2,000
標準背隙 Backlash	arcmin	L1	3~10	≦8						
		L2	15~100	≦12						
最大加速扭矩 T_{2B} Max. Acceleration Torque	Nm	L1/L2	3~100	1.8倍額定輸出力矩 / 1.8 Times of nominal output torque						
最大輸出(急停)扭矩 T_{2NOT} Max. Output(Emergency Stop)Torque	Nm	L1/L2	3~100	3倍額定輸出力矩 / 3 Times of nominal output torque						
扭轉剛性 Torsional Rigidity	Nm/arcmin	L1/L2	3~100	2.3	5	15	45	69	140	220
容許徑向力 F_{2rB} Max. Radial Force	N	L1/L2	3~100	750	1,180	3,000	6,500	9,100	11,150	35,000
容許軸向力 F_{2aB} Max. Axial Force	N	L1/L2	3~100	325	590	1,500	3,250	4,550	5,575	17,500
使用壽命 Service Life	hr	L1/L2	3~100	S5週期運轉 > 20,000；(S1連續運轉 > 10,000 hrs) S5 Cycle Operation ; > 20,000 (S1 Continuous Operation ; > 10,000 hrs)						
使用溫度 Operation Temperature	℃	L1/L2	3~100	-25℃ ~ 90℃						
效率 η Efficiency	%	L1	3~10	≦97						
		L2	15~100	≦94						
潤滑 Lubrication		L1/L2	3~100	合成潤滑油脂 / Synthetic Lubrication Grease						
噪音值 Noise Level	dB	L1	3~10	≦62	≦62	≦65	≦68	≦70	≦70	≦70
		L2	15~100	≦65	≦65	≦68	≦70	≦72	≦72	≦72
防護等級 Protection Class	IP	L1/L2	3~100	IP 65						
安裝方向 Mounting Position		L1/L2	3~100	任意方向 / Any direction						
重量 Weight	kg	L1	3~10	0.5	1.2	3.5	7.5	15.5	38	54
		L2	15~100	0.8	1.8	5.2	11.2	22.5	48	75

減速機轉動慣量
Reducer Moment of inertia

規　格 Model NO.	單 位 Unit	節 數 Stage	減速比 Ratio	42	60	90	115	142	180	220
轉動慣量 J_1	kg.cm²	L1	3	0.04	0.14	0.61	3.25	8.75	24.63	50.67
			4	0.04	0.13	0.48	2.74	7.16	20.12	46.21
			5	0.04	0.11	0.47	2.74	6.84	19.80	45.28
			7	0.04	0.11	0.44	2.58	6.78	19.21	43.32
			10	0.04	0.11	0.44	2.57	6.68	19.13	42.98
		L2	15	0.04	0.14	0.61	3.25	8.75	24.63	50.67
			20	0.04	0.13	0.48	2.74	7.16	20.12	46.21
			25	0.04	0.11	0.47	2.74	6.84	19.80	45.28
			30	0.04	0.14	0.61	3.25	8.75	24.63	50.67
			35	0.04	0.11	0.44	2.58	6.78	19.21	43.32
			40	0.04	0.11	0.48	2.74	7.16	20.12	46.21
			50	0.04	0.11	0.47	2.74	6.84	19.80	45.28
			70	0.04	0.11	0.44	2.58	6.78	19.21	43.32
			100	0.04	0.11	0.44	2.57	6.68	19.13	42.98

MODEL : PG SERIES

1-Stage (Ratio:3~10)

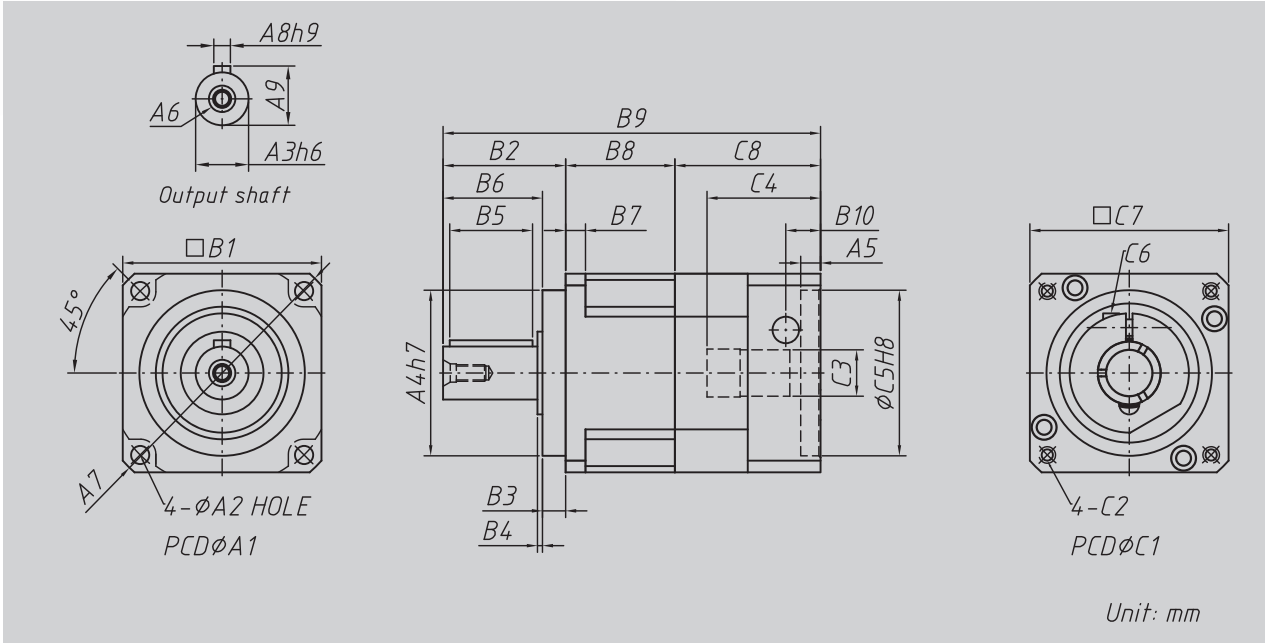

Model / Code	42	60	90	115	142	180	220
A1	50	70	100	130	165	215	250
A2	3.5	5.5	6.5	8.5	10.5	13.5	17
A3	13	16	22	32	40	55	75
A4	35	50	80	110	130	160	180
A5	6	6	7.5	22.5	11	12	35
A6	M4 x P0.7	M5 x P0.8	M8 x P1.25	M12 x P1.75	M16 x P2.0	M20 x P2.5	M20 x P2.5
A7	56	80	116	148	185	240	292
A8	5	5	6	10	12	16	20
A9	15	18	24.5	35	43	60	79.5
B1	42.6	60	90	115	142	180	220
B2	26	37	48	65	97	104.5	150
B3	5.5	7	10	12	15	20	30
B4	1.6	1.5	1.5	2	3	2.5	15
B5	15	25	30	40	63	70	90
B6	20.5	30	38	53	82	84.5	120
B7	4	6	8	10	12	16	20
B8	28.3	33	43	54	72	87.5	97.4
B9	88.65	114	138	190	251	292	384.4
B10	11	13.5	14	15	23	27.5	45
C1	46	70	90	145	165	200	265
C2	M4 x P0.7	M5 x P0.8	M6 x P1.0	M8 x P1.25	M10 x P1.5	M12 x P1.75	M14 x P2.0
C3	8	14 , 19	19 , 24	24 , 28	35 , 42	42	55
C4	26	34	43	67.5	68	72.5	121
C5	30	50	70	110	130	114.3	230
C6	M3 x P0.5	M5 x P0.8	M6 x P1.0	M8 x P1.25	M10 x P1.5	M12 x P1.75	M12 x P1.75
C7	42.6	60	90	130	142	180	250
C8	34.35	44	47	71	82	100	144